FSW-Tech

Friction Stir Welding European Qualifications

# CU2 – Pregatirea si definirea imbinarii

## Operator FSW

Co-funded by the
Erasmus+ Programme
of the European Union

# 2. Pregatirea imbinarii

2.1 – Metode de curatare

2.2 – Procese si dispozitive de masurare

2.3 – Dispozitive de pozitionare

2.4 – Programe FSW

2.5 – Parametri si limitele FSW

2.6 – Specificatia procedurii de sudare(WPS)

2.7 – Tipuri de unelte

This project has been funded with support from the European Commission. This publication reflects the views only of the author, and the Commission cannot be held responsible for any use which may be made of the information contained therein - ERASMUS + KA2: 2017-1-SK01-KA202-035415

# 2.1 – Metode de curatare

<u>Curatarea imbinarilor</u>:

- Un pas necesar in obtinerea unei suduri de calitate
- Se indeparteaza praful, unsoarea si umezeala
- Urmarile negative ale unei curatiri necorespunzatoare:
  - Rezistenta scazuta la oboseala
  - Ductilitate scuzuta local
  - Defecte volumetrice

<u>Cele mai comune metode de curatare</u>:

✓ Cu solvent si cu prosoape de hartie

Alte metode de curatare
*(mai rar folosite):*

✓ Polizarea

✓ Cu peria de sarma

✓ Cu decapant

This project has been funded with support from the European Commission. This publication reflects the views only of the author, and the Commission cannot be held responsible for any use which may be made of the information contained therein - ERASMUS + KA2: 2017-1-SK01-KA202-035415

# 2.2 – Procese si dispozitive de masurare

## *2.2.1 – Procese de masurare*

- Grosimea pieselor de sudat
- Variatia grosimii unei placi
- Pot aparea defecte geometrice din cauza unei masurari necorespunzatoare a grosimii si setarea gresita a unor parametri pentru compensarea nepotriviri grosimilor
- Cele mai folosite intr-un atelier:
  - Dispozitive mecanice: folosesc o abordare mai directa in compararea marginilor piesei cu o rigla

This project has been funded with support from the European Commission. This publication reflects the views only of the author, and the Commission cannot be held responsible for any use which may be made of the information contained therein - ERASMUS + KA2: 2017-1-SK01-KA202-035415

# 2.2 – Procese si dispozitive de masurare

## *2.2.2 – Dispozitive de masurare*


Aparat de masurat grosimea


Subler

This project has been funded with support from the European Commission. This publication reflects the views only of the author, and the Commission cannot be held responsible for any use which may be made of the information contained therein - ERASMUS + KA2: 2017-1-SK01-KA202-035415

# 2.2 – Procese si dispozitive de masurare

## *2.2.2 – Dispozitive de masurare*

*Cum se foloseste sublerul?*

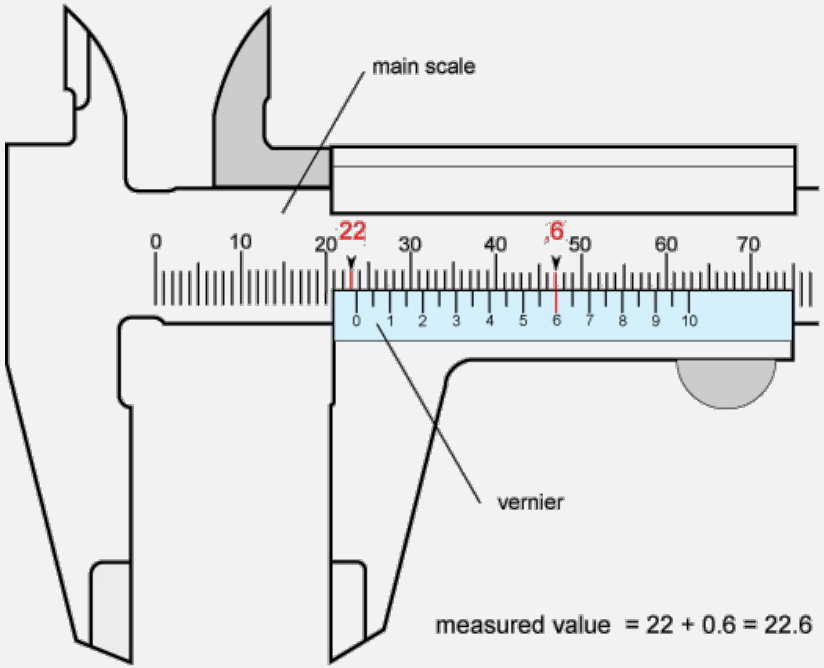


This project has been funded with support from the European Commission. This publication reflects the views only of the author, and the Commission cannot be held responsible for any use which may be made of the information contained therein - ERASMUS + KA2: 2017-1-SK01-KA202-035415

# 2.3 – Elemente de pozitionare

## *2.3.1 – Tipuri de montaje*

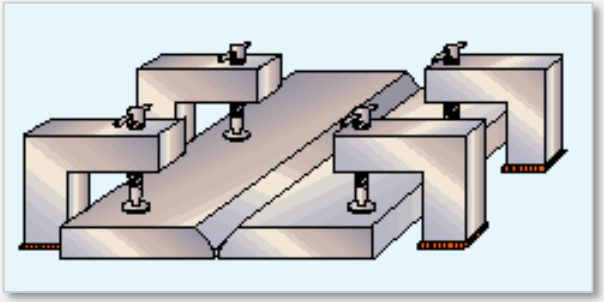

Montaj pentru sudare *(Courtesy of TWI)*

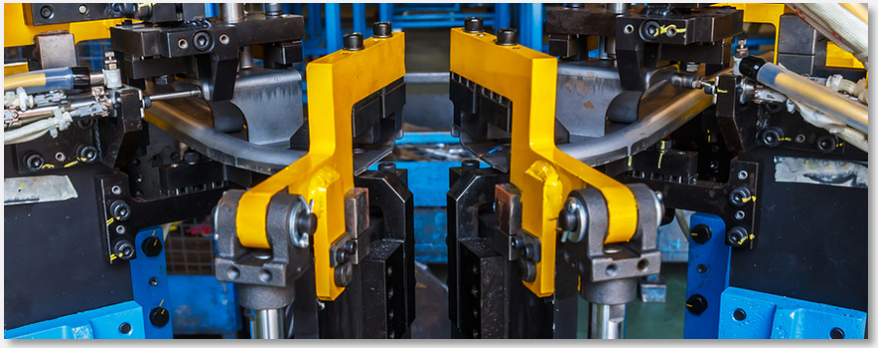

Montaj pentru sudare *(Courtesy of Tulsa Welding School)*

Montaj pentru gaurire*(Courtesy of Kreg*

This project has been funded with support from the European Commission. This publication reflects the views only of the author, and the Commission cannot be held responsible for any use which may be made of the information contained therein - ERASMUS + KA2: 2017-1-SK01-KA202-035415

# 2.3 – Elemente de pozitionare

## *2.3.2 – Elemente de fxare*

Frame Railing

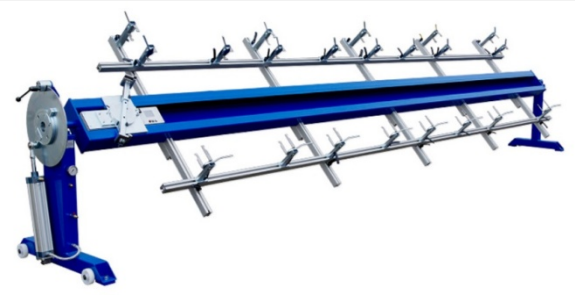

Railing Welding

Fixare prin vid

This project has been funded with support from the European Commission. This publication reflects the views only of the author, and the Commission cannot be held responsible for any use which may be made of the information contained therein - ERASMUS + KA2: 2017-1-SK01-KA202-035415

# 2.3 – Elemente de pozitionare

## *2.3.3 – Sisteme de prindere*

Tipuri de prindere:

- ✓ Prindere mecanica
- ✓ Prindere pneumatica si hidraulica
- ✓ Prindere prin vid
- ✓ Prindere magnetica
- ✓ Prindere electrostatica

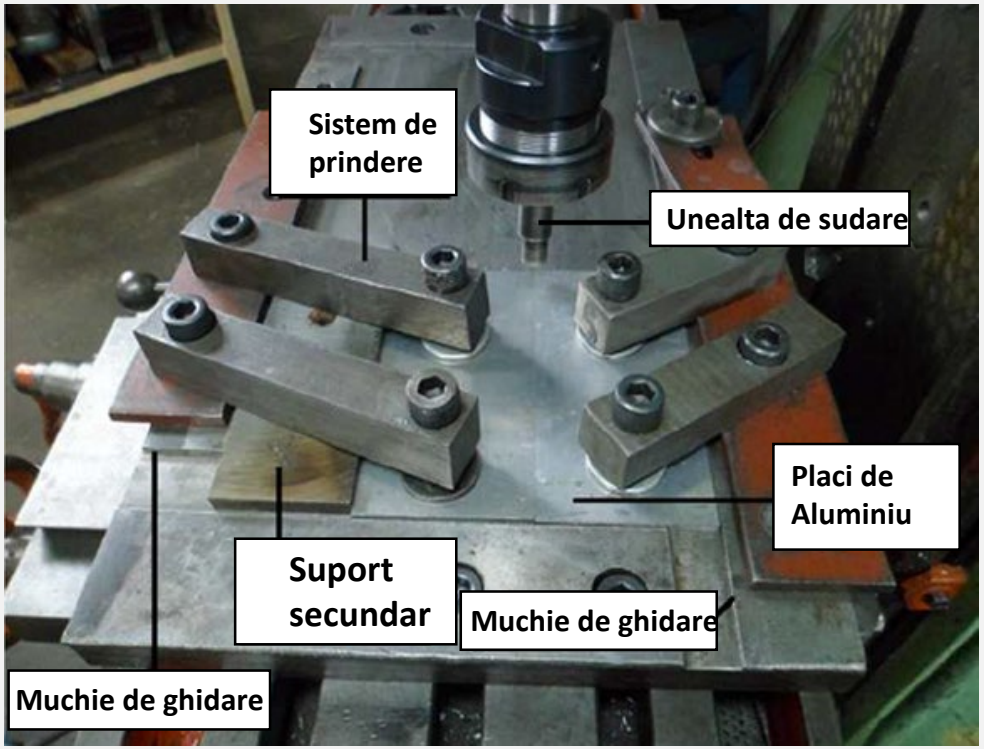


This project has been funded with support from the European Commission. This publication reflects the views only of the author, and the Commission cannot be held responsible for any use which may be made of the information contained therein - ERASMUS + KA2: 2017-1-SK01-KA202-035415

# 2.3 – Elemente de pozitionare

## *2.3.4 – Clamping Principles*

- ✓ **Pozitia** – forta de strangere trebuie aplicata pe o zona robusta si sustinuta a piesei de sudat
- ✓ **Rezistenta** – suficienta pentru a asigura o prindere sigura fara a deteriora piesa de sudat
- ✓ **Productivitate** – timpul de prindere ar trebui sa fie redus de folosirea butoanelor si manerelor pentru o productivitate mai mare
- ✓ **Ergonomie** – intreg procesul de prindere ar trebui sa fie usor accesibil pentru operatori, reducand astfel oboseala the whole process of clamping should be operator friendly, reducing fatigue
- ✓ Elementele de prindere ar trebui echipate cu paduri din fibre pentru a evita deteriorarea pieselor de sudat

This project has been funded with support from the European Commission. This publication reflects the views only of the author, and the Commission cannot be held responsible for any use which may be made of the information contained therein - ERASMUS + KA2: 2017-1-SK01-KA202-035415

# 2.3 – Elemente de pozitionare

## *2.3.5 – Influenta sistemului de prindere asupra sudurii*

Factorii care influenteaza deformarea pieselor:

- ✓ Zona de fixare
- ✓ Timpul de fixare
- ✓ Timpul de inlaturare a fixarii
- ✓ Preincalzirea elementelor de fixare.

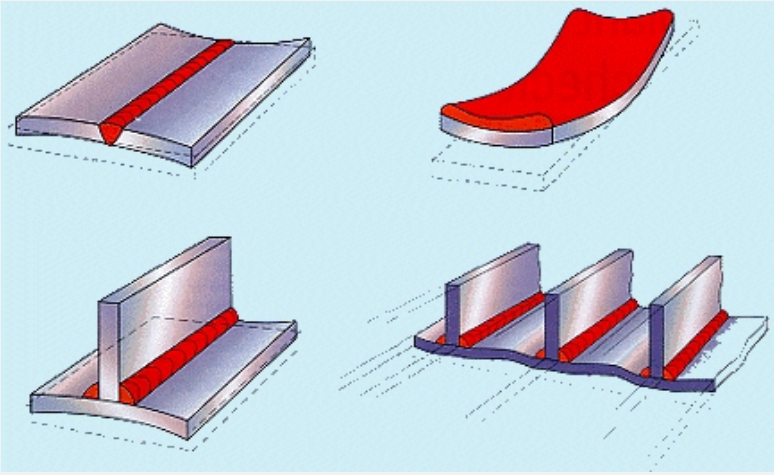

Tipuri de deformatii la piese sudate
*(courtesy of TWI)*

This project has been funded with support from the European Commission. This publication reflects the views only of the author, and the Commission cannot be held responsible for any use which may be made of the information contained therein - ERASMUS + KA2: 2017-1-SK01-KA202-035415

# 2.4 – Programe FSW

## *2.4.1 – Tipuri de programe FSW*


Exemplu de echipament si panou de comanda
*(Courtesy of Grenzebach)*


Sistem de control dezvoltat pentru FSW
*(Courtesy of ESAB)*

This project has been funded with support from the European Commission. This publication reflects the views only of the author, and the Commission cannot be held responsible for any use which may be made of the information contained therein - ERASMUS + KA2: 2017-1-SK01-KA202-035415

# 2.4 – Programe FSW

## *2.4.2 – Elementele de baza ale unui program FSW*

***Ce include un program FSW?***

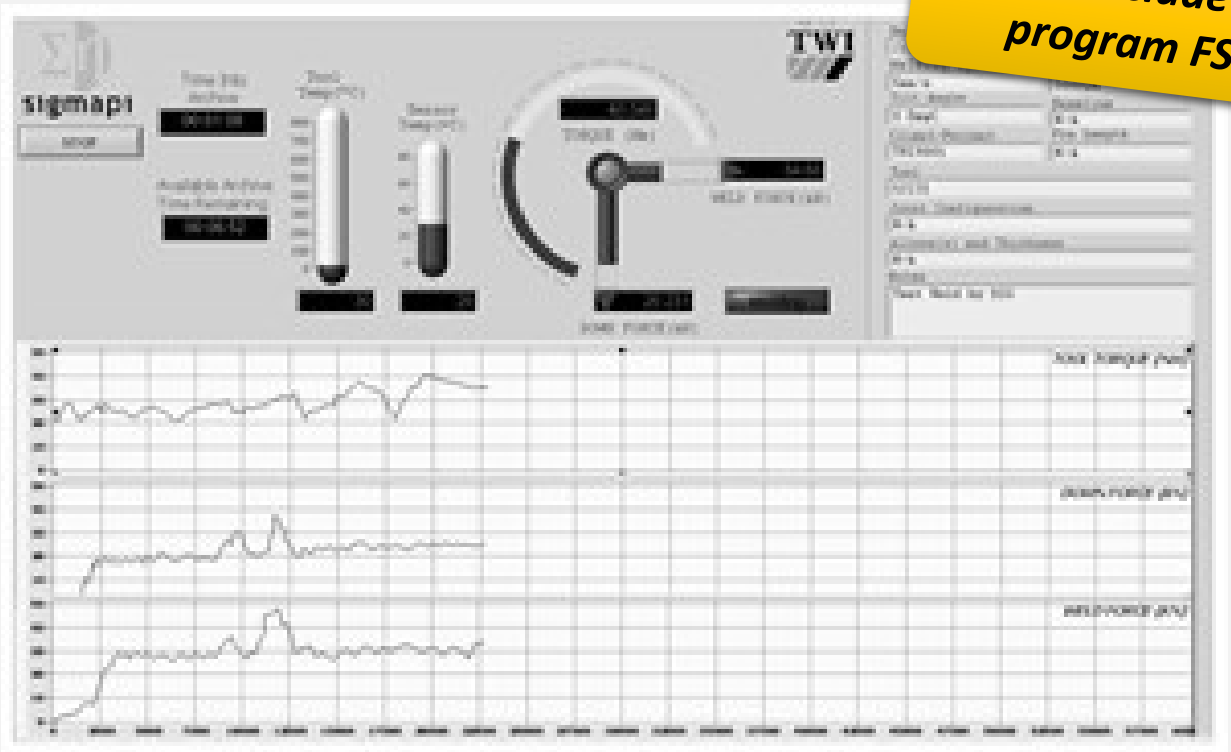


This project has been funded with support from the European Commission. This publication reflects the views only of the author, and the Commission cannot be held responsible for any use which may be made of the information contained therein - ERASMUS + KA2: 2017-1-SK01-KA202-035415

# 2.5 – Parametri si limite

## *2.5.1 – Sistemul de control*

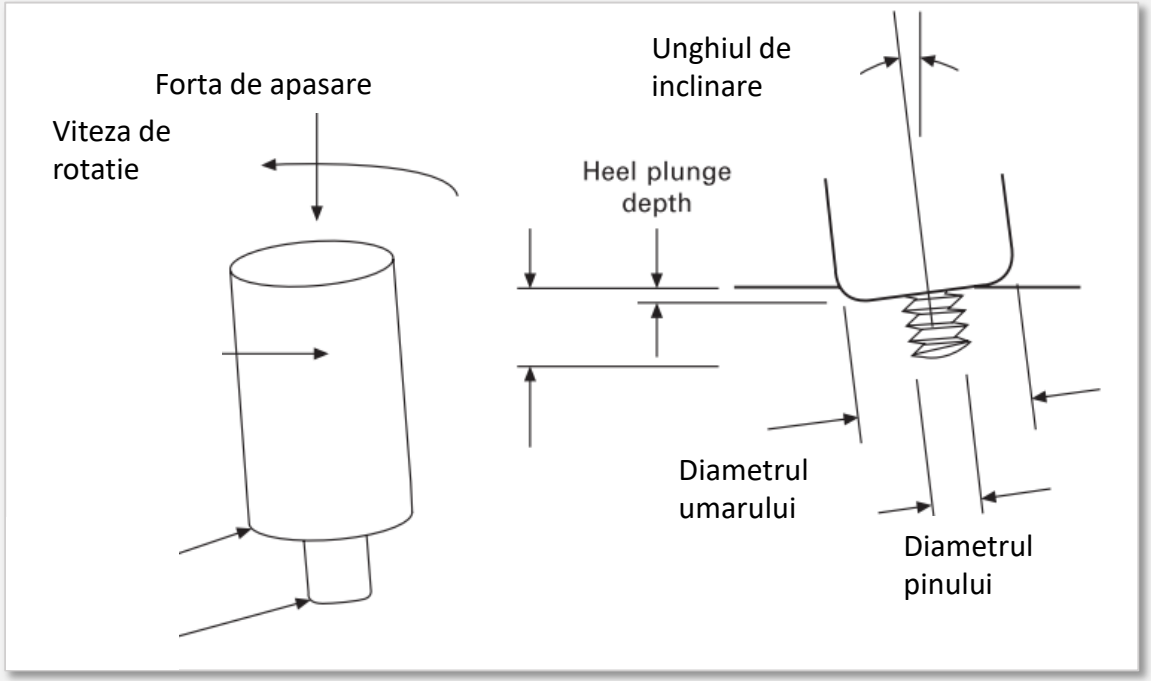


- ✓ Viteza de sudare sau viteza de deplasare
- ✓ Viteza de rotatie a uneltei
- ✓ Adancimea de plonjare
- ✓ Forta axiala sau forta de apasare a uneltei
- ✓ Unghiul de inclinare a uneltei

This project has been funded with support from the European Commission. This publication reflects the views only of the author, and the Commission cannot be held responsible for any use which may be made of the information contained therein - ERASMUS + KA2: 2017-1-SK01-KA202-035415

# 2.6 – Specificatia procedurii de sudare (WPS)

## Preliminary welding procedure specification

Manufacturer's pWPS No.: _____
Manufacturer's WPQR No.: _____
Friction stir welding operator's name: _____
Parent material type, temper, and reference standard(s): _____
Parent material thickness (mm): _____
Outside diameter of tube (mm): _____
Equipment identification (model, serial number, and manufacturer): _____
Tool identification (sketch)[1]:
Clamping arrangement (sketch)[1]:
Tack welding: _____
Joint preparation and cleaning methods: _____

**Joint design**

| Joint design and joint configuration | Welding sequences |
|---|---|
| (Sketch)[1] | |

**Welding details**

| Run | Tool motion, rotation speed<br>r/min | Heel plunge depth<br>mm<br>or axial force<br>kN | Tilt angle<br>° | Side tilt angle<br>° | Dwell time<br>s | Welding speed<br>mm/min<br>others |
|---|---|---|---|---|---|---|
| | | | | | | |

Welding position: _____
Pre-weld heat treatment: _____
Preheating temperature (°C): _____ Preheat maintenance temperature (°C): _____
Interpass temperature (°C): _____
Shielding gas: _____ Designation: _____ Gas flow rate (l/min): _____
Postweld processing: _____
Postweld heat treatment: _____
Time, temperature, method: _____
Heating and cooling rates: _____
Other information[1] _____

.....

Manufacturer
Name, date and signature

_____

1) If required.

This project has been funded with support from the European Commission. This publication reflects the views only of the author, and the Commission cannot be held responsible for any use which may be made of the information contained therein - ERASMUS + KA2: 2017-1-SK01-KA202-035415

# 2.6 – WPS

## *2.6.1 – Tipul imbinarii*

| Joint Design | Before Welding | After Welding |
|---|---|---|
| Butt joint | 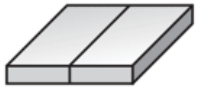 |  |
| Butt joint | 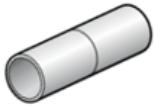 | 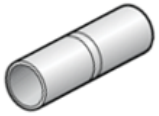 |
| Lap joint |  |  |
| Lap + Butt joint | 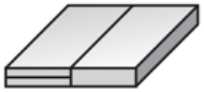 | 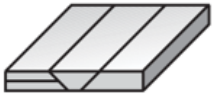 |

| Joint Design | Before Welding | After Welding |
|---|---|---|
| Lap + Butt joint | 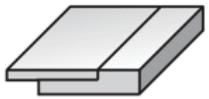 | 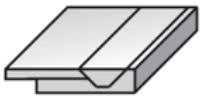 |
| Corner joint | 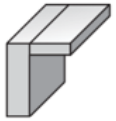 | 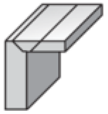 |
| Corner joint | 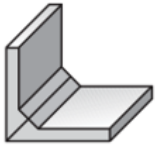 | 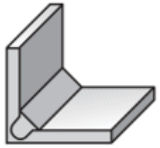 |
| T-joint | 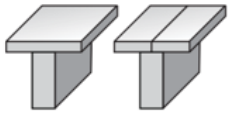 | 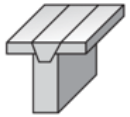 |

This project has been funded with support from the European Commission. This publication reflects the views only of the author, and the Commission cannot be held responsible for any use which may be made of the information contained therein - ERASMUS + KA2: 2017-1-SK01-KA202-035415

# 2.7 – Tipuri de unelte FSW

## Unealta FSW

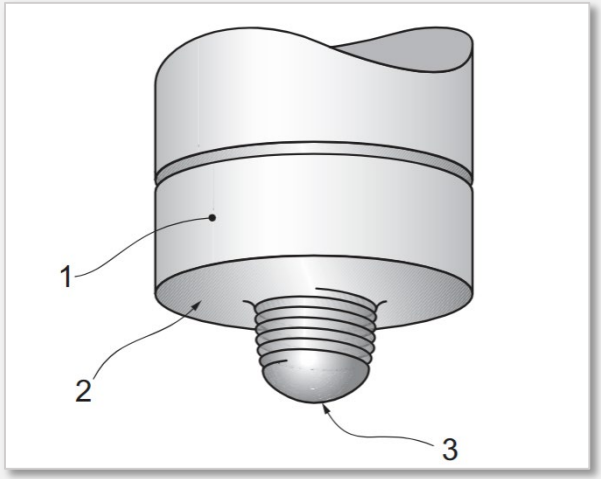


1 – Pisa de lucru
2 – Umar
3 – Pin

## Forme ale uneltei FSW

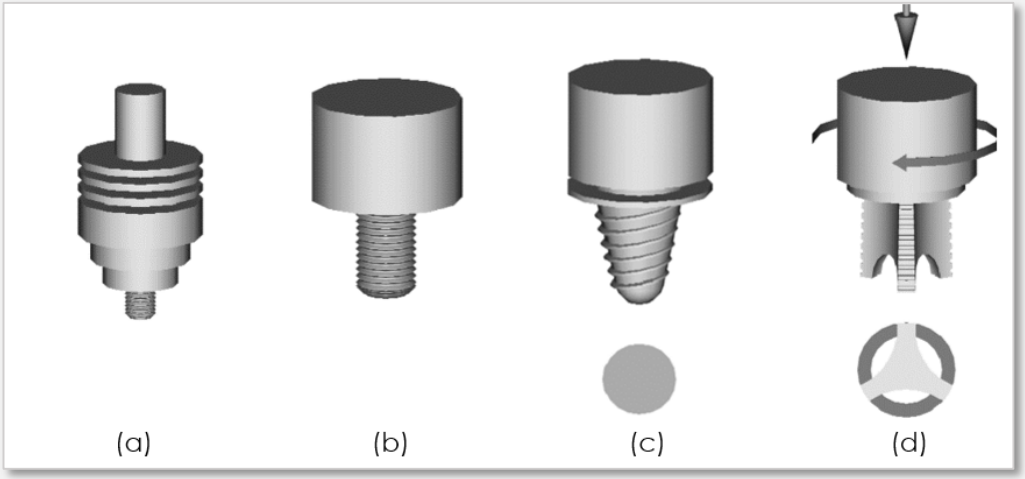


(a) Stepped shoulder with cylindrical threaded pin
(b) Cu umar plat si cu pin cilindric filetat
(c) Cu umar plat si cu pin conic
(d) Pin trefilat

This project has been funded with support from the European Commission. This publication reflects the views only of the author, and the Commission cannot be held responsible for any use which may be made of the information contained therein - ERASMUS + KA2: 2017-1-SK01-KA202-035415

# 2.7 – Tipuri de unelte FSW

## *2.7.1 – Pozitionarea excentrica*

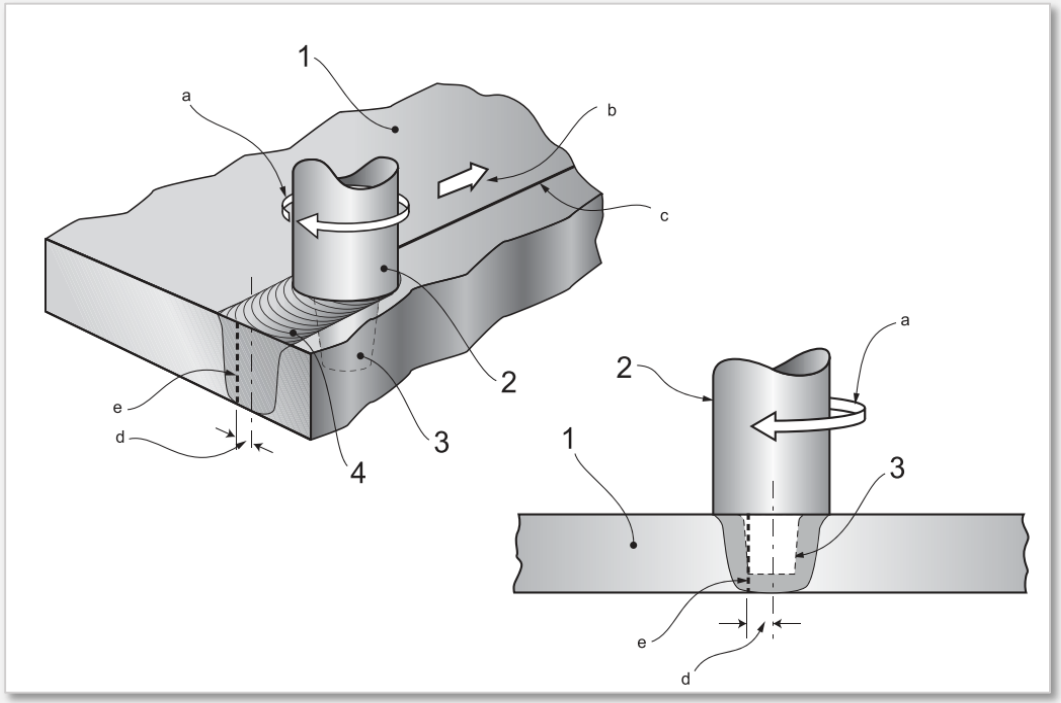


1. Piesa de sudat
2. Unealta
3. Pin
4. Suprafata sudurii

a. Sensul de rotatie al uneltei
b. Directia de deplasare
c. imbinare
d. Excentricitate laterala
e. Pozitia imbinarii inainte de sudare

This project has been funded with support from the European Commission. This publication reflects the views only of the author, and the Commission cannot be held responsible for any use which may be made of the information contained therein - ERASMUS + KA2: 2017-1-SK01-KA202-035415

# 2.7 – Tipuri de unelte FSW

## *2.7.2 – Pozitia pe Z*

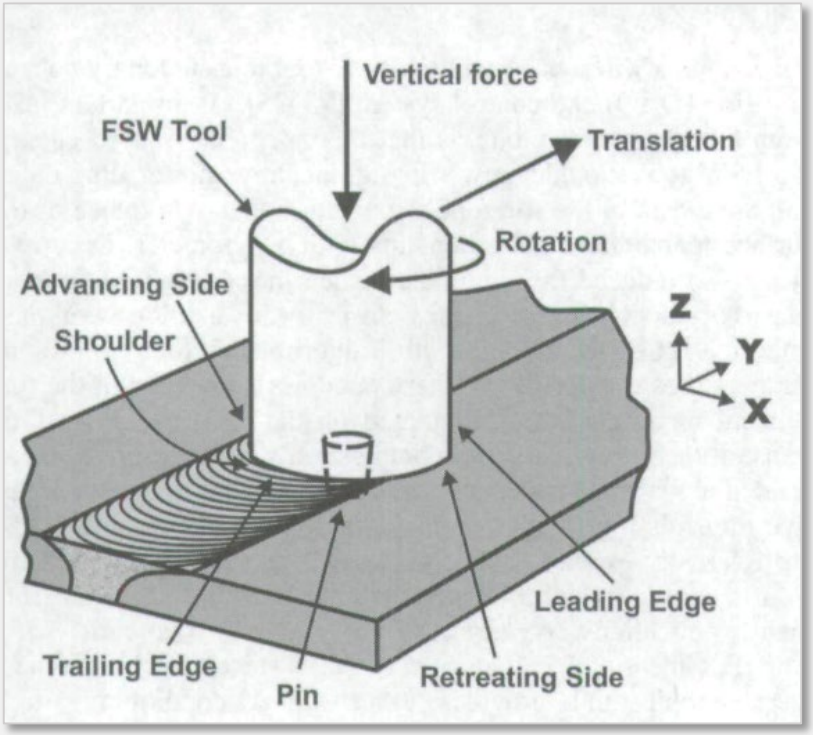


<u>Pozitia pe z</u>– este de obicei 0 la suprafata piesei de sudat

Forta aplicata pe axa z se numeste <u>**forta axiala**</u>

This project has been funded with support from the European Commission. This publication reflects the views only of the author, and the Commission cannot be held responsible for any use which may be made of the information contained therein - ERASMUS + KA2: 2017-1-SK01-KA202-035415

# 2.7 – Tipuri de pini

## *2.7.3 – Adancimea de plonjare*

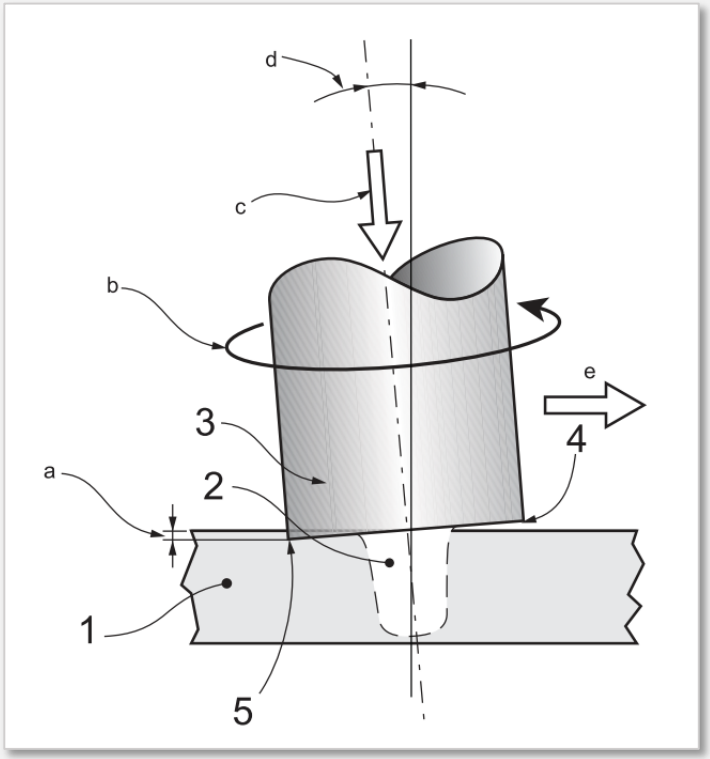


*Distanta care umarul intra in materialul de baza*

1. Piesa de sudat
2. Pin
3. Unealta
4. Umar (unghi de inclinare)
5. Heel (shoulder trailing edge)

a. Adancimea umarului
b. Sensul de rotatie al uneltei
c. Forta axiala
d. Unghiul de inclinare
e. Sensul de sudare

This project has been funded with support from the European Commission. This publication reflects the views only of the author, and the Commission cannot be held responsible for any use which may be made of the information contained therein - ERASMUS + KA2: 2017-1-SK01-KA202-035415

# 2.8 – References

[2-1] Future Weld, *Mechanized Welding - Mechanized, Orbital and Robot Welding*. 2014.

[2-2]D. Lohwasser and Z. Chen, *Friction Stir Welding: From Basics to Applications*. 2010.

[2-3] R. S. Mishra and M. W. Mahoney, "Friction Stir Welding and Processing," *ASM Int.*, p. 368, 2007.

[2-4] I. O. for S. (ISO), *Final Draft ISO/FDIS 25239-5*, 1st ed. ISO, 2011.

[2-5] ESAB, "Handbook - Joint Design & Prep." [Online]. Available: https://www.esabna.com/euweb/sa_handbook/585sa2_26.htm. [Accessed: 18-Jul-2018].

[2-6] J. N. Pires, A. Loureiro, and G. Bölmsjo, *Welding robots: Technology, system issues and applications*, no. August 2015. 2006.

[2-7] "What Is a Welding Jig? - Tulsa Welding School." [Online]. Available: https://www.weldingschool.com/blog/welding/what-is-a-welding-jig/. [Accessed: 19-Jul-2018].

[2-8]"UNIT 4 JIGS AND FIXTURES Structure 4.1 Introduction."

[2-9] "Welding Fixtures and How They Work | Forster America." [Online]. Available: https://www.forsteramerica.com/welding-fixtures-and-how-they-work/. [Accessed: 19-Jul-2018].

[2-10] T. Jagadeesha, "CLAMPING DEVICES." National Institute of Technology Calicut, p. 20.

[2-11] T. Schenk, I. M. Richardson, M. Kraska, and S. Ohnimus, "A study on the influence of clamping on welding distortion," *Comput. Mater. Sci.*, vol. 45, no. 4, pp. 999–1005, 2009.

[2-12] D. Lohwasser and Z. Chen, *Friction stir welding Related titles :* 2010.

[2-13] I. O. for S. (ISO), *Final Draft ISO/FDIS 25239-1*, 1st ed. ISO, 2011.

This project has been funded with support from the European Commission. This publication reflects the views only of the author, and the Commission cannot be held responsible for any use which may be made of the information contained therein - ERASMUS + KA2: 2017-1-SK01-KA202-035415

# 2.8 – References

[2-14] P. S. D. N. K. Mishra, S. R., Friction stir welding and processing. 2014.

[2-15] I. O. for S. (ISO), "ISO 15607," 2003.

[2-16] I. O. for S. (ISO), "Final Draft ISO/FDIS 25239-4," no. 4, 2011.

[2-17] R. R. Of et al., "Draft International Standard Iso / Fdis," vol. 2006, 2006.

[2-18] V. K. M, M. Arivarsu, M. Manikandan, and N. Arivazhagan, "Review on friction stir welding of steels," Mater. Today Proc., vol. 5, no. 5, pp. 13227–13235, 2018.

[2-19] A. Pradeep, "A Review on Friction Stir Welding of Steel," Int. J. Eng. Res. Dev., vol. 3, no. 11, pp. 2278–67, 2012.

[2-20] R. Miller, "GUIDELINES FOR FRICTION STIR WELDING," Detroit, 2011.

[2-21] A. Fehrenbacher, N. A. Duffie, N. J. Ferrier, F. E. Pfefferkorn, and M. R. Zinn, "Toward Automation of Friction Stir Welding Through Temperature Measurement and Closed-Loop Control," J. Manuf. Sci. Eng., vol. 133, no. 5, p. 051008, 2011.

[2-22] HSE Gov.UK, "Welding fume - Reducing the risk." [Online]. Available: http://www.hse.gov.uk/welding/fume-welding.htm. [Accessed: 07-Aug-2018].

[2-23] ESAB AB Welding Automation and ESAB, "Friction Stir Welding - Technical Handbook." [Online]. Available: https://www.esabna.com/euweb/sa_handbook/585sa2_26.htm. [Accessed: 18-Jul-2018].

[2-24] D. Veljić et al., "Advantages of friction stir welding over arc welding with respect to health and environmental protection and work safety," Struct. Integr. Life, vol. 15, no. 2, pp. 111–116, 2015.

[2-25] S. B. ; D. R. D.Muruganandam, "HEALTH HAZARDS DUE TO VARIOUS WELDING TECHNIQUES AND ITS REMEDY BY FRICTION STIR WELDING (FSW)," Int. J. Res. Aeronaut. Mech. Eng., vol. 2, no. 3, pp. 96–101, 2014

This project has been funded with support from the European Commission. This publication reflects the views only of the author, and the Commission cannot be held responsible for any use which may be made of the information contained therein - ERASMUS + KA2: 2017-1-SK01-KA202-035415

Co-funded by the
Erasmus+ Programme
of the European Union

FSW-Tech

Friction Stir Welding European Qualifications

# Thank you

This project has been funded with support from the European Commission. This publication reflects the views only of the author, and the Commission cannot be held responsible for any use which may be made of the information contained therein - ERASMUS + KA2: 2017-1-SK01-KA202-035415